John Berends Implements Pty Ltd

AGRICULTURAL ENGINEERS

OPERATOR'S MANUAL

PARTS LIST

RM 75 TRAILING OFFSET DISC CULTIVATOR

PRODUCT NO.

0830/0840	18 Plate with 24" x 5mm/24" x 6mm Discs
0831/0831	20 Plate with 24" x 5mm/24" x 6mm Discs
0844/0845	22 Plate with 24" x 5mm/24" x 6mm Discs
0832/0842	24 Plate with 24" x 5mm/24" x 6mm Discs
0833/0843	28 Plate with 24" x 5mm/24" x 6mm Discs

130 FRANKSTON-DANDENONG RD, DANDENONG SOUTH, VIC. 3175 AUSTRALIA
(ABN 79 007 035 369)
PHONE (03) 9791 2494 FAX NO. (03) 9794 5568
berends@johnberendsimplements.com.au www.johnberendsimplements.com.au

TABLE OF CONTENTS

Page No.

SAFETY

Farm machinery is dangerous if operated incorrectly so please read this manual in its entirety prior to operating the machine.

No operator, however experienced in farm machinery operation, should attempt to use any machine they have not been competently trained to use. Your local Department of Agriculture can help you with training, as can most Occupational Health and Safety offices, Agricultural schools and colleges and farm equipment dealerships.

All instructions relating to tractor safety as per the tractor operators manual should be followed. When making any machine adjustments, stop the tractor engine first and wait for all moving parts to stop. Maintain the tractor to ensure it remains safe to use. Do not operate faulty or damaged equipment.

Extreme caution should be taken when fitting equipment to the tractor's three point linkage. Avoid standing between the implement and the tractor when coupling machinery.

All machines should be mounted and retained correctly. All guards must be kept in place and correctly maintained. P.T.O. shafts must be correctly attached and secured to both the tractor and the machine. Decals must be visible and legible at all times. Keep well clear of all moving parts.

Keep all people and animals at a safe distance from all moving parts. Children must not be allowed to operate this equipment and all passengers must have the same level of protection as the operator.

Wear protective clothing where appropriate.

Never operate when tired (not alert) or in poorly lit areas and stay alert for humps and other hidden hazards. Remove all timber, rocks and foreign objects prior to operation.

Avoid operating the machine in wet conditions.

Exercise extreme caution when changing direction on hills. Avoid sudden movement, sudden breaking, high speeds, rough terrain and steep slopes.

If machine starts to vibrate, stop tractor, turn off engine and investigate.

After striking a foreign object or if there are doubts about the performance of the machine, stop the tractor as described and check if machine is making excessive noise.

Extreme caution must be taken when working in public areas (roadsides etc). It is recommended that flaps and chains are fitted to slashers when operating in public areas. These are available as optional extras. Rear flaps are compulsory in public areas.

Watch overhead clearance and beware of underground pipes and cables.

Where fitted, hydraulic hoses and fittings must be maintained so as to prevent damage.

Do not modify this equipment in anyway, or use it for any other purpose than it was designed to do.

Never work under unsupported machines or adjust unsupported machines. Do not enter the danger zone where a load being carried by a machine could fall on you, for example a round bale from a bale fork, a log from a carryall or material from a rear end loader.

These instructions should be used in conjunction with any local regulations regarding safety ie OHS.

Maintenance is essential for safe operation. Ensure maintenance is carried out regularly by people qualified to do so. This is of particular importance on P.T.O. drive machines where driven parts can fly off at high speed if wearing parts are not properly maintained.

FAILURE TO FOLLOW THESE INSTRUCTIONS AND PROCEDURES MAY RESULT IN EQUIPMENT MALFUNCTION, OR DAMAGE, SERIOUS INJURY OR EVEN DEATH.

INTRODUCTION:

This manual was developed specifically for the machine you have purchased. The information within is to assist you in preparing, operating and maintaining your machine. Please read and understand the contents of the manual completely before attempting to operate your machine, paying special attention to all safety details. With our policy of continuous improvement, products and specifications may change without notice and without incurring the obligation to install such changes on any unit previously delivered.

RM75 Trailing Offset Disc Cultivators

Gibbins Rawling have been making ploughs since 1878 - over 100 years of experience! The RM 75 offset disc cultivating plough is a tough, rugged machine designed for Australian conditions. It is an ideal disc for both primary and secondary tillage on 60 H.P. to 130 H.P. tractors. The gang bolt axles are made from 40mm square high tensile steel and all bearings are triple sealed with added protection plate. Fitted with 610mm x 5mm (24” x 3/16”) or 610mm x 6mm (24” x 1/4”) scalloped discs. Twin pressure screws can be adjusted individually to transfer weight to the rear of the cultivator resulting in even disc penetration. Easy gang adjustment provides a perfect level finish. Fully adjustable drawbar and pronged scrapers are standard on the RM75 with options of formed scrapers, parking jack and hydraulics for machine lift available.

MACHINE SPECIFICATIONS

	18 Plate	**20 Plate**	**22 Plate**	**24 Plate**	**28 Plate**
Approx. weight	1575kg	1650kg	1725kg	1930kg	2120kg
No. Bearings	6	6	8	8	8
Cutting Width	2.06m (6’9”)	2.3m (7’6”)	2.5m (8’3”)	2.74m (9’)	3.2m (10’6”)
No. Axles	2	2	4	4	4

WARRANTY

John Berends Implements P/L warrants each new product sold to be free from defects in material and workmanship, under normal use and service, as outlined in the operators manual, for a period of 12 months.

This warranty is void if any damage to the machine has been caused by misuse or non genuine parts have been used or any repairs have been made by any persons other than authorised dealer service personnel.

The manufacturer/dealer is not obligated to any transportation charges incurred in the repair or replacement of parts.

This warranty does not exclude any condition or warranty implied by the Trade Practices Act 1974 or any other legislation which implies any condition which cannot be excluded.

Safety Features

1. SERIAL NUMBER (Decal)

2. WARNING DECAL

3. BERENDS DECAL

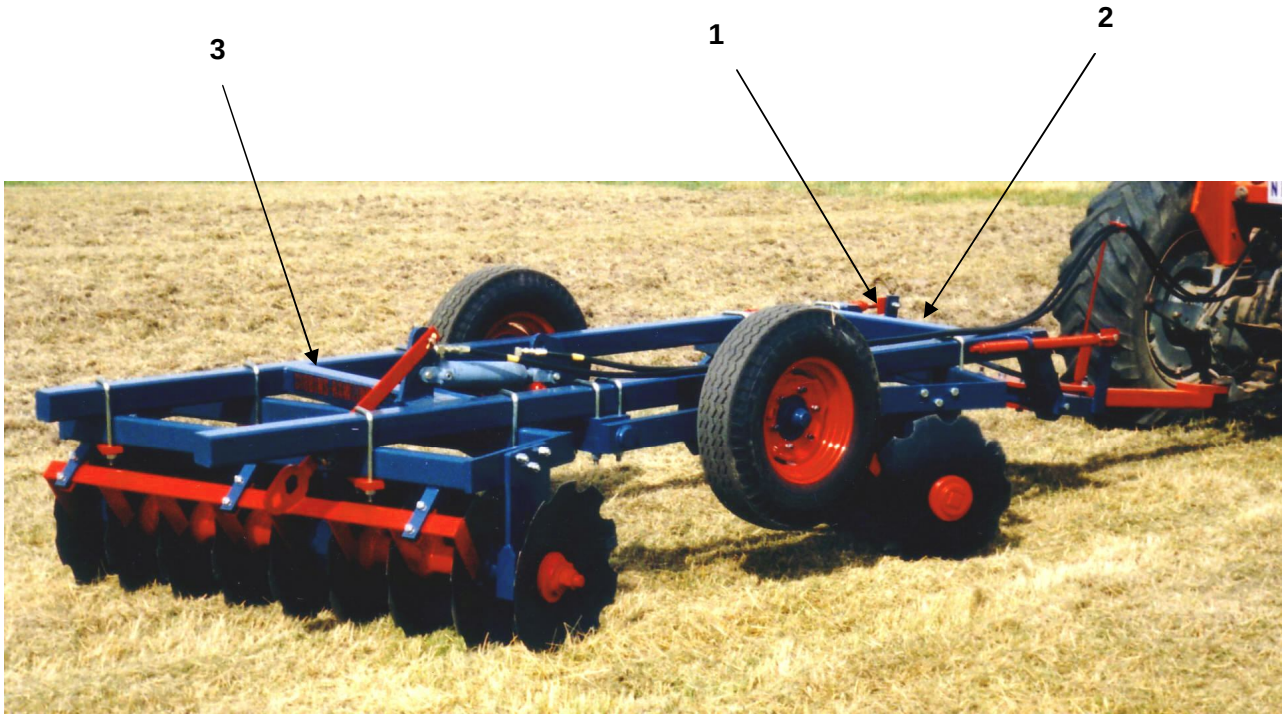

MACHINE ASSEMBLY

GANG ASEMBLY

CAUTION: Due to the size and awkward nature of the trailing discs it is important that all components are adequately supported.

As there are a number of sizes of discs available, refer to the attached set-up sheet on the back page in this manual. It provides approximate measurements to suit your discs. Adjustments may need to be made to suit different ground conditions.
Both gangs are different so distinguish which is the front and which is the back prior to assembly. The scrapers are mounted at the rear of each gang.

FRONT GANG:

Position the front gang under the main frame in the approximate position it will be secured in.

Starting with the left hand side (direction of travel), place the front “U” bolt (Pt 3375) over the main frame side-members, with the thread pointing down. The left hand side front “U” bolt will be located in front of the main frames’ front cross member. Bring the two frames together and placing the clamp plate (Pt 3381) under the gang frame, secure with nuts and spring washers.
The front “U” bolt on the right hand side should be placed behind the main frames’ cross member and the clamp plate secured with nuts and spring washers. Secure the back two “U” bolts on the front gang in their appropriate positions, making sure that threads always point downwards.

REAR GANG:

When attaching the rear gang, the simplest way may be to reverse the main frame and front gang over the rear gang. Alternatively, lift the back of the main frame up and support it whilst rolling the rear gang into position. Starting with the right hand side, place the rear “U” bolt approximately 225mm behind the main frame cross member and using the clamp plate secure the frames with nuts and spring washers. On the left hand side of the rear gang, the rear “U” bolt should be 610mm from the same cross member and secure using the clamp plates and nuts and spring washers provided.

DRAWBAR ASSEMBLY

Generally the drawbar runs in the right hand half of the pull bar. For initial set up, position the drawbar approximately 280mm from the right hand side of the pull bar. Tighten the drawbar plates (Pt 3388) securely with the four bolts, nuts and spring washers provided. The height adjustment of the drawbar must be set so it is pulling fairly straight when in the ground. Therefore the front gang is neither lifting out of the ground nor dipping into the ground. The correct setting and adjustment may be made to the drawbar by connecting it to either the bottom or top of the tractor connecting point. Additional height adjustment can be obtained by turning the drawbar upside down and connecting it at either the top or bottom of the tractor connecting point. This should only be done if the adjustment has run out on the tension springs. Should the discs not be travelling straight it may require the drawbar to be repositioned along the pull bar until the optimum setting is achieved. The parking jack (optional) can be used to raise the tractor end of the drawbar. If possible allow the tractor drawbar to float by removing bars or stabiliser chains which will allow the discs to track straight.

WHEEL ASSEMBLY

Position the axle (less the wheels) underneath the main frame between the two gangs. The two arms of the axle should be facing forward with the main shaft at the rear. The axle lug (transport lug), which later connects to the hydraulic ram, should be on the right side of the machine when facing the direction of travel. This axle lug will line up with the opposing transport lug on the main frame of the plough. Attached to the underside of the main frame are locating mounts for the axle blocks. There are two pair of axle blocks (Pt 3376) provided, one pair for each side of the axle. Lift the axle up so it is hanging just below the locating mounts.

CAUTION: As the axle is fairly heavy it is advised that a lifting device is used (eg crane or lifting jib) to position the axle. The axle must be sufficiently supported when attaching it to the main frame to prevent it from falling on the person assembling the machine.

Place one of the axle blocks in each of the locating mounts and lift the axle up so as to hold the block in position. Position the other two axle blocks underneath the axle and hold them in place using the U-bolts (Pt 3375) provided.
Note: The axle blocks have a recessed semi-circular section, which should be positioned facing the outside of the main frame (where the axle is welded to the arms).
The U-bolts should face downwards as they do in the gang set-up. Secure all four U-bolts using the spring washers and nuts provided. Ensure the wheel blocks are still positioned in the main frame locating mounts.
Fit the Highway Truck tyres (Pt 3373) to the two hubs (PT 3365) and secure with wheel nuts (Pt 3374) provided. For easy maintenance it is best to have the tyre valves facing outwards. Ensure the tyres are inflated to the recommended pressure of 45-60PSI

SPRING TENSION

The spring tension should be set up so that the machine is kept stable during cultivation. For more precise adjustments refer to the operation section of this manual.

HYDRAULIC RAM AND HOSES

The hydraulic ram and hoses are provided as an optional extra. The operator may wish to use his/her own ram and hoses. Attach the main body section of the hydraulic cylinder to the bottom hole of the transport lug on the main frame. Connect the extending rod end of the cylinder to the bottom hole of the transport lug located on the wheel axle. Secure with clevis pins and clips. Attach the hydraulic hoses to the ram and fit couplings to the other end of the hoses. Keep the hoses well clear of the gangs. This is achieved by elevating the hoses using the hose spring (Pt 3389) and clamps (Pt 3390) which are attached to the drawbar. It may be necessary to secure the hoses to the main frame further using plastic ties provided. Connect the hoses to the remote hydraulics of the tractor.
Note: If the transport bar (Pt 3360) is being used, the hydraulic cylinder may need to be connected with the ports facing the ground. The side port on the hydraulic cylinder may also need to be used to prevent the bar interfering with the hydraulics.

OPERATION

Once all safety procedures have been followed, start the tractor and raise the disc cultivator off the ground using the hydraulics.

TRANSPORT

Use the transport bar provided at all times when transporting over long distances. This prevents the hydraulic ram from being damaged. The transport bar is connected to the upper hole of the transport lug on the main frame and the upper hole of the transport hole on the wheel axle. Secure using the pins provided. Remember to remove the transport bar before using the ram. The bar may remain connected to the rear hole and be flipped backwards when not in use. By doing this, it is clear of the ram's movements and always handy when required.

Turning

When turning with the implement whilst cultivating, always turn into the vee of the gangs (to the right). Otherwise if turning away from the vee of the gang (to the left) the discs are to be raised clear of the ground until the turn is completed. If this is not done, excessive strain may be placed on the tractor and discs, eventually causing damage.

Stopping

Lower the cultivator, stop the tractor engine (removing the ignition key) and apply the park brake. Ensure that the cultivator is well supported when not in use. If detaching the drawbar, use the parking jack to hold the drawbar in place

CAUTION: When the cultivator is on the ground, yet not linked to the tractor, it may be unstable. Ensure the machine is prevented from rolling backward or forward.

Levelling the machine

The only positive way to ensure the machine is level, is to work through the ground at the desired depth. Whilst the discs are still in the ground, check the penetration at each end of the gang frames. Should the machine require levelling because the discs are lifting out or digging into the ground, the best suggested method of adjusting is to raise the machine clear of the ground and adjust the tension springs as required.

Wheel set-up

There are a couple of points regarding the setting of the wheel for depth. If the wheels are right in the air whilst cultivating, all the weight of the frame bears on the gang frames. If the plough is digging in one side the gangs would need to be adjusted so that the weight of the frame is on the side which is not digging in. This can only be done within the bounds of the amount of offset of the machine to the tractor. On the converse side, if the machine is being carried on the wheels, the frame can be moved so that it carries the side digging in more and stops it diving in. Remember to always set the wheels at the same position. Setting at ground level works better than right in the air. If you don't set the wheels at the same position each run your setting is different and it make it difficult to work out what your other changes are doing. If the tractor has a float position then this can be used to keep wheel depth constant.

Spring adjustments

The following information ahs been recorded to assist in the levelling of the implement. When reference is made to left and right, it refers to the position taken up behind the machine and facing the direction of travel.

*** The right hand side rear gang is:-**

a) **Lifting** - apply pressure to the right hand front spring (Pt 3384) and adjust the right hand back spring (Pt 3383) so it will maintain an even pressure to keep the machine stable.
b) **Dipping** - tension the right hand back spring and adjust the right hand front spring if required.

*** The left hand side rear gang is:-**

a) **Dipping** – apply pressure to the left hand back spring and adjust the left hand front spring so it will maintain an even pressure to keep the machine stable.
b) **Lifting** - tension the left hand front spring and adjust the left hand back spring if required.
c) **Bad case of lifting -** should it occur, slacken the left hand back spring, and tension both front springs applying slightly more pressure to the left hand side.

*** The right hand side front gang is:-**

a) **Dipping** - apply pressure to the right hand front spring and adjust the right hand back spring if required.
b) **Lifting (Not Common)** - apply pressure to the right hand back spring and if additional adjustment is required, loosen off the right hand front spring and take up the tension on the right hand back spring.

*** The left hand side front gang is:-**

a) **Dipping** - tension the front left hand spring or this could be a problem combined with having the draw bar incorrectly set. The correct setting, and adjustment may be made to the draw bar by turning it over so the tractor hitch point is either at the top or bottom of the draw bar. This should be done if the adjustment has run out on the tension spring.
b) **Lifting (Not Common)** - check draw bar, it may require adjustment by turning up side down and re-checking springs.

Note : There should never be any need to add weight to the gang frames so as to gain even penetration. A combination of springs and draw bar being correctly adjusted will achieve the desired result.

Tractor behaviour

Should the tractor pull any way but straight, after the machine has been set correctly in a level position, then the reason can always be contributed to the amount of drag set up by the discs passing through the ground. This drag can vary to a great extent because of the condition of the soil eg. wet, dry, sand, clay. As it would be impossible to give an answer to all these situations, due to the large variation in soil, we will provide the following example:
The machine, when set up correctly, is found to be pulling the tractor badly to the left hand side. The correction method used in this instance was to slide the draw bar to the extreme right hand side of the pull bar, resulting in the desired tracking of the tractor. A tractors incorrect pulling behaviour would be due to an uneven working pressure on the discs and by trying the following methods there will be a solution, which will correct the tractor's direction so it will maintain a straight line to the direction of travel.

a) Check the gangs are set at the correct angles **or** try an alternate angle (refer (d)) bearing in mind the closer you have the gangs at 90° to the frame the lesser the penetration.
b) Place the draw bar in different positions along the pull bar and vary the angle with each setting until the optimum is achieved
c) Evenly adjust springs either up or back along the pressure screw. This step is used to transfer more work to either the front or rear gangs, by digging the discs deeper into the

ground, thus increasing the drag on one or the other gang. When this work is shared evenly between the two gangs, the tractor will cut straight and true.

d) If you do not wish your machine to have an uneven penetration, e.g. back gang cutting deeper than the front gang or vice-versa, as described in (c), then the drag is also affected by the angle of the disc. The greater the angle, the greater the drag, the less the angle, the less the drag and penetration. So adjusting the angles is another alternative.

MAINTENANCE

When doing any type of maintenance on this machine, always follow the safety steps described in this manual. Use only authorised genuine parts for replacement.
The cultivator must be adequately supported under its body (Make certain it cannot fall).

Bolts, Nuts and Bronze Bushes
Keep all bolts tight, in particular gang bolts. All bronze bushes should be checked each season as they are a wearing part and may need replacing.

Gang Bolts
Don't forget to keep the gang bolts tight with regular checks, particularly when the machine is new (when the machine is new friction will cause the disc and spacers to wear in). The gang bolt is vulnerable to damage or breakage if not in tension and damage caused because of loose gang bolts would void warranty.

Cast Axle Bearings
Don't lubricate cast axle bearing blocks (this will cause a type of graphite "abrasive paste" which will cause expensive wear to the high tensile axle.
NOTE: Bearing blocks (Pt 3376) are in matching halves and can be turned over or replaced if wear occurs.

Lubrication
Lubrication plays a very important part in extending the life of wearing parts.

1) Threaded rod - should be kept covered with a smear of grease to keep nuts and thread corrosion FREE.
2) Wheel hubs - are pre-packed with grease and should only need attention at the end of each season, unless dusty conditions cause seals to break down. Force wheel bearing grease between rollers cone and cage, using hand method or grease packing equipment. Add grease in wheel hub between hub between caps and fill hub cap.

Wheel Bearing Adjustment
Tighten adjusting nut while rotating or oscillating wheel until the wheel binds slightly. Back off castellated type nuts between 1/6 to ¼ turn. Wheel should now turn freely, having between .001" and .010" end play. Lock with split pin securely at this position.

Disc Bearings
These are of the pre-lubricated type and will not require attention through their long life. Although protector plates will prevent most material from getting into the bearing, objects such as grass and wire wrapping around the bearing should be removed regularly to prevent early bearing failure.

Wheel kit

Check tyre pressure is between 45 and 60 psi. Wheel must run freely on axle and yoke must be lubricated.
Note: Bearings are replaceable if necessary.

SPARE PARTS

ORDER SPARE PARTS THROUGH YOUR ORIGINAL SUPPLIER OR YOUR LOCAL JOHN BERENDS IMPLEMENTS DEALER.

Always quote the machine serial number or product number, spare part number and its part name as stated in the operator's manual.

Glossary of terms

c/w = Complete with
sw = Spring Washer
n.s.s. = Not serviced separately
a.r. = As required
fw = Flat Washer

RM 75 Top Frame

Key No	Part No	Quantity	Description
1		1	Main Frame
2	3375	8	‘U’ bolt for gangs c/w nut/sw
3	3381	8	RM.19 Plate suit ‘U’ bolt
4	3380	4	Lock nuts
5	3382	2	Flat washer
6	3383	2	C.16 Rear pressure spring (11” o/a length)
7			See key No.9
8	3384	2	C.15 Front pressure spring (17” o/a length)
9	3385	2	RM.14 Pressure screw
10	3340	2	Bolt/nut/sw
11	3387	2	Bush (suit pressure screw)
12	1879	2	Front cross bar pivot bolt/nut/sw
13	3387	4	Bush (suit drawbar)
14	3386	8	Square washer
15		1	Front cross bar
16	3388	2	Pull bar plates
17	1879	7	Bolt/nut/sw suit pull bar plates
18	3389	1	C.9 Spring
19	3390	1	C.10 Clamp for hose
20	3393	1	Drawbar
21	3392	1	Retaining bolt suit spring

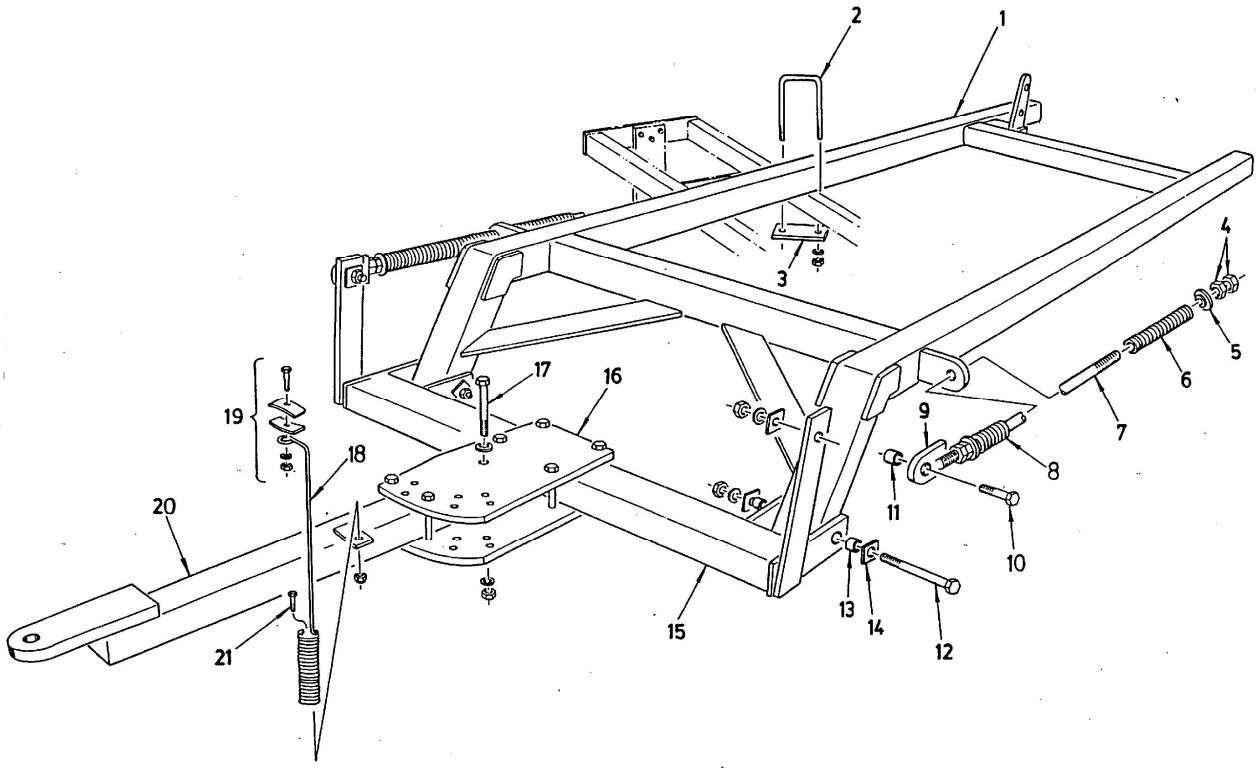

RM 75 Wheel Assembly

There have been many different wheel/hub/stub configurations used over the years. To enable accurate identification, provide as much detail as possible for these components. These include Serial No., purchase date, stud pattern, hole centre diameters (on rim) etc. This will enable us to identify the correct components.

Key No	Part No	Quantity	Description
1	3360	1	Transport bar
2	1940	1	Linch pin
3	3361	2	Pin suit transport bar
4	3362	2	Seal suit FAD hub
5	3363	2	Inner bearing & cup suit FAD hub
6	3364	6	Stud suit FAD hub
7	3365	2	Hub, FAD
8	3366	2	Outer bearing & cup suit FAD hub
9	3367	2	Flat washer
10	3368	2	Split pin
11	3369	2	Castellated nut
12	3370	2	Hub cap
13	3371	2	6 stud rim
14	3372	2	Tube
15	3373	2	Tyre
16	3374	12	Wheel nut
17	3375	4	‘U’ Bolt
18	3376	4	P.552 Wheel blocks
19		1	Main axle
20		1	Clip suit hydraulic pin
21		1	Hydraulic pin
22	1577	1	Hydraulic ram
23		1	Hydraulic elbow
24	1578	1	Hydraulic hose
25	3377	1	Bronze bush

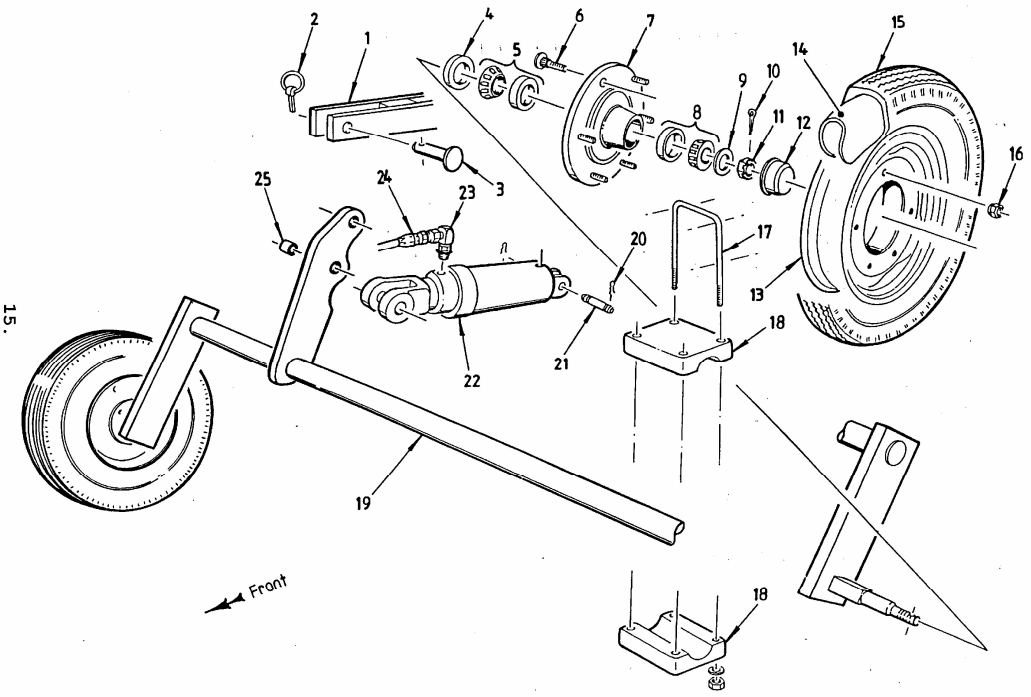

RM 75 Gang Assembly

There have been a couple of changes over the years in bearing set-up. Please check that the design in the picture matches the part required.

Key No	Part No	Quantity	Description
1	1581	ar	Gang Frame – specify size
2	3332	ar	C.163 - 3 disc gang bolt axle
	3333	ar	C.164 - 4 disc gang bolt axle
	3334	ar	C.165 - 5 disc gang bolt axle
3	0576	ar	P.594 Head washer
4	1955	ar	Bolt/nut/sw suit scraper clamp
5	3340	ar	Bolt/nut/sw suit hanger bracket
6	1591	ar	Scraper - state length
7	3341	ar	Scraper clamp
8	0568	ar	P.592 Disc spacer spool
9		ar	Disc - refer disc list
10	0572	ar	P.591 Bearing spacer spool
11	3342	ar	Hanger bracket (specify bearing type)
12	3343	ar	Bolt/locknut, trunnion retaining
13	3344	ar	P014A Bearing housing – 4” I.D.
	3391	ar	PO14B Bearing housing – 100mm I.D.
	2314	ar	Front (large) bearing guard – not shown
	2315	ar	Rear) small) bearing guard – not shown
14	0594	ar	C60A sealed ball race bearing – 4” O.D.
	0581	ar	C60B sealed ball race bearing – 100mm O.D.
15	3439	ar	C.61 Circlip
16	0570	ar	P.590 Bearing spacer spool
17	0574	ar	P.593 End washer (nut end)
18	3345	ar	Lock nut (hexagon)
	1593	ar	Full nut (hexagon)
	3346	1 per axle	Plain washer
19	0585	ar	Flanged disc bearing complete
20	3924	ar	Flanged disc bearing bolt/nut/sw

The set-up below shows the two different bearings arrangements used.

The main drawing shows triple sealed bearings pressed into a cast housing and contained by a circlip. There were two different sizes bearings available – 100mm (early models) and 4” (later models). The easiest way to identify these bearings is to measure the outside diameter. Another distinguishable feature is the width of the bearing. The 100mm bearing is a parallel flat bearing whilst the 4” bearing has a raised inner section. The housings for both these bearings are designed to match.

The bottom photo shows the current flanged disc greaseable bearing set-up which was introduced in 2002

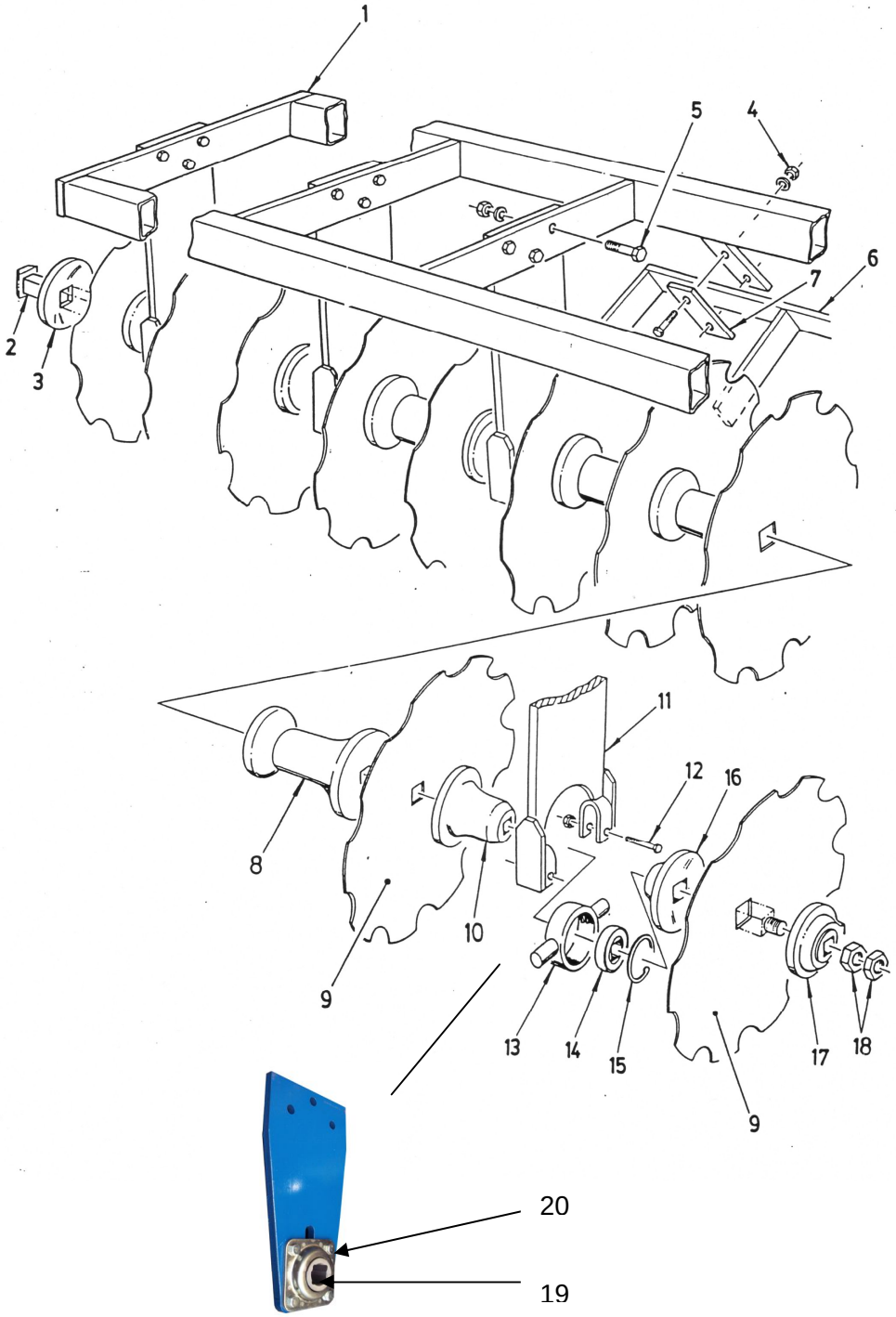

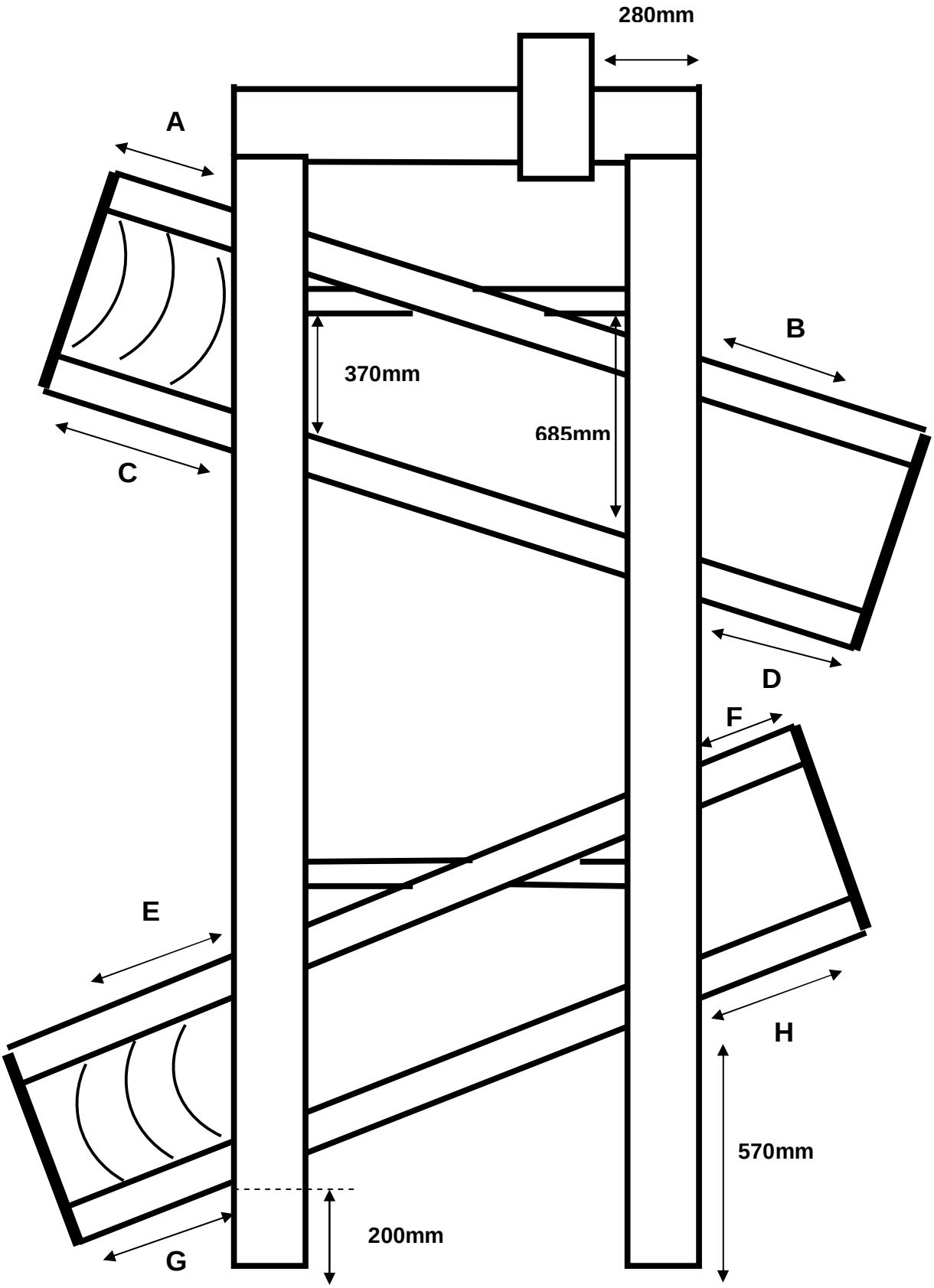

Model	A	B	C	D	E	F	G	H
18 PLATE	Close to frame	495mm	195mm	305mm	420mm	65mm	215mm	265mm
20 PLATE	115mm	610mm	305mm	420mm	535mm	180mm	330mm	380mm
22 PLATE	230mm	750mm	460mm	495mm	720mm	210mm	470mm	460mm
24 PLATE	350mm	845mm	540mm	655mm	770mm	415mm	565mm	615mm
28 PLATE	585mm	1080mm	775mm	890mm	1005mm	650mm	800mm	850mm